no.	date	by	ckd	description
0	2/29/24	MDH	SSL	AMENDMENT NO. 2

SITE SPECIFIC DATA			
Structure ID			WQ1
Water Quality Flow Rate (cfs)			26.00
Peak Flow Rate (cfs)			-
Rim Elevation			849.54'
Top of Vault Elevation			842.79'
Pipe Data	**Pipe Size**	**Pipe Type**	**Invert Elevation**
Inlet	-	-	836.21'
Outlet	-	-	836.04'
Notes: 10-Year Design Storm Flow Rate: 90.60 cfs			

PERFORMANCE SPECIFICATIONS	
Screen System Storage Volume	197.22 cf
Total Sump Volume	1440.83 cf
Sediment Storage Volume	95.00 cf
Peak Flow Capacity*	182.60 cfs
Treatment Flow Capacities:*	
50% Removal, 75 micron	15.56 cfs
80% Removal, 150 micron	45.40 cfs
*Contact Oldcastle for additional treatment and peak flow capacities.	

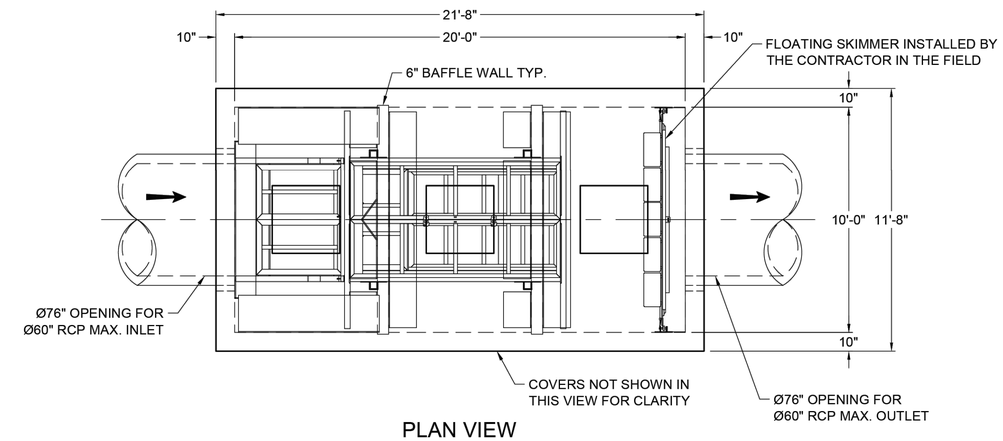

PLAN VIEW

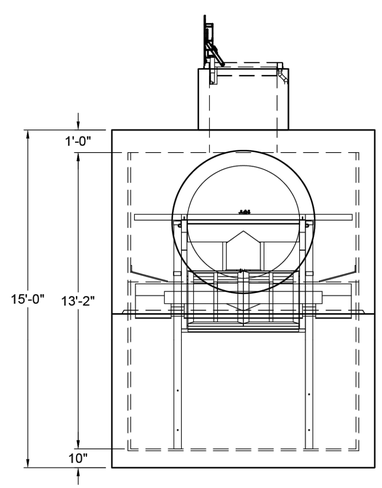

LEFT END VIEW

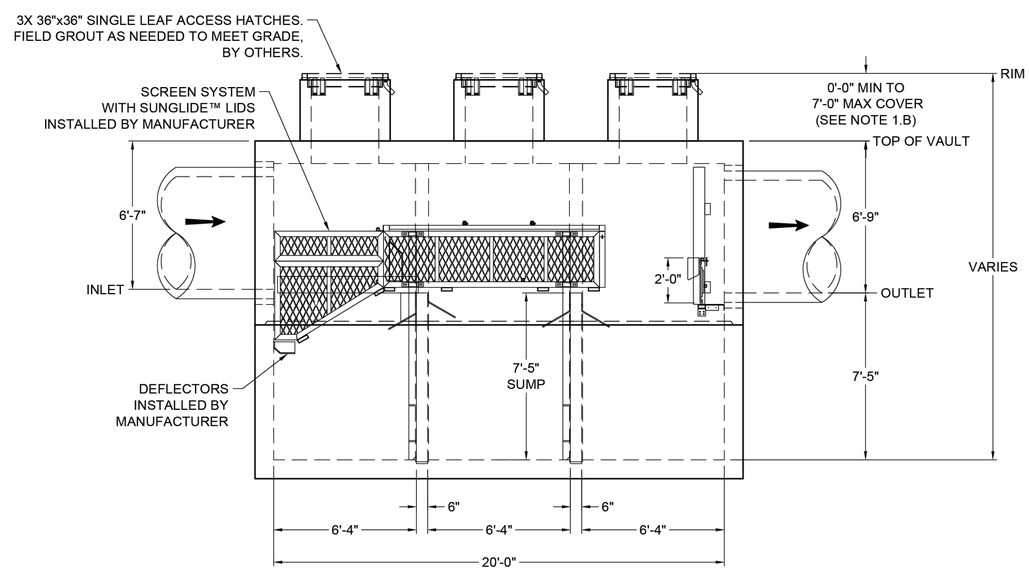

ELEVATION VIEW

NOTES:

1. DESIGN LOADINGS:
   A. AASHTO HS-20-44 (WITH IMPACT)
   B. DESIGN SOIL COVER: 7'-0" MAXIMUM
   C. ASSUMED WATER TABLE: BELOW BASE OF PRECAST (ENGINEER-OF-RECORD TO CONFIRM SITE WATER TABLE ELEVATION)
   D. LATERAL EARTH PRESSURE: 45 PCF (DRAINED)
   E. LATERAL LIVE LOAD SURCHARGE: 80 PSF (APPLIED TO 8'-0" BELOW GRADE)
   F. NO LATERAL SURCHARGE FROM ADJACENT BUILDINGS, WALLS, PIERS, OR FOUNDATIONS.
2. CONCRETE 28-DAY MINIMUM COMPRESSIVE STRENGTH: 5,000 PSI MINIMUM.
3. REINFORCING: REBAR, ASTM A615/A706, GRADE 60
4. CEMENT: ASTM C150
5. REQ'D ALLOWABLE SOIL BEARING CAPACITY: 2,500 PSF
6. REFERENCE STANDARD:
   A. ASTM C890
   B. ASTM C913
   C. ACI 318-14
7. THIS STRUCTURE IS DESIGNED TO THE PARAMETERS NOTED HEREIN. ENGINEER-OF-RECORD SHALL VERIFY THAT NOTED PARAMETERS MEET OR EXCEED PROJECT REQUIREMENTS. IF DESIGN PARAMETERS ARE INCORRECT, REVIEWING ENGINEER/AUTHORITY SHALL NOTIFY OLDCASTLE INFRASTRUCTURE UPON REVIEW OF THIS SUBMITTAL.
8. OVERSIZED HOLES TO ACCOMMODATE SPECIFIC PIPE TYPE MUST BE CONCENTRIC TO PIPE ID. AFTER PIPES ARE INSTALLED, ALL ANNULAR SPACES SHALL BE FILLED WITH A MINIMUM OF 3,000 PSI CONCRETE FOR FULL THICKNESS OF PRECAST WALLS. PIPES ARE TO BE FLUSH WITH THE INSIDE SURFACE OF THE CONCRETE STRUCTURE.
9. CONTRACTOR RESPONSIBLE TO VERIFY ALL SIZES, LOCATIONS, AND ELEVATIONS OF OPENINGS.
10. CONTRACTOR RESPONSIBLE TO ENSURE ADEQUATE BEARING SURFACE IS PROVIDED (I.E. COMPACTED AND LEVEL PER PROJECT SPECIFICATIONS).
11. SECTION HEIGHTS, SLAB/WALL THICKNESSES, AND KEYWAYS ARE SUBJECT TO CHANGE AS REQUIRED FOR SITE REQUIREMENTS AND/OR DUE TO PRODUCT AVAILABILITY AND PRODUCTION FACILITY CONSTRAINTS.
12. FOR SITE SPECIFIC DRAWINGS WITH DETAILED STRUCTURE DIMENSIONS AND WEIGHTS, PLEASE CONTACT OLDCASTLE INFRASTRUCTURE.
13. MAXIMUM PICK WEIGHT: XX,XXX LBS. (* COMBINED WEIGHT INCLUDES BAFFLE WALLS AND PRODUCT INTERNALS.)
14. INTERNALS SHALL CONSIST OF A FLOATING SKIMMER, FLOW DEFLECTORS, ELEVATED CENTRAL SCREEN SYSTEM AND SLIDING LIDS. THESE COMPONENTS EFFECTIVELY REDUCE HEAD LOSS, INCREASE POLLUTANT REMOVAL AND SIMPLIFY MAINTENANCE.

- PRELIMINARY -
NOT FOR CONSTRUCTION

THIS PRODUCT IS PROTECTED BY ONE OR MORE OF THE FOLLOWING US PATENT(S): 6,428,692; 7,270,747; 7,981,283; 8,142,666; 8,366,923; 8,491,797; 7,846,327; 8,034,236; RELATED FOREIGN PATENTS, OR OTHER PATENTS PENDING.

Oldcastle Infrastructure™ A CRH COMPANY
Ph: 800.579.8819 | www.oldcastleinfrastructure.com/stormwater

THIS DOCUMENT IS THE PROPERTY OF OLDCASTLE INFRASTRUCTURE, INC. IT IS CONFIDENTIAL, SUBMITTED FOR REFERENCE PURPOSES ONLY AND SHALL NOT BE USED IN ANY WAY INJURIOUS TO THE INTERESTS OF, OR WITHOUT THE WRITTEN PERMISSION OF OLDCASTLE INFRASTRUCTURE, INC. COPYRIGHT © 2024 OLDCASTLE INFRASTRUCTURE, INC. ALL RIGHTS RESERVED.

Nutrient Separating Baffle Box®
NSBB-1020

CUSTOMER: Burns & McDonnell

PROJECT NAME: is CSO 19 Sewer Separator Phase 1 - Kansas City, KS

DATE	MFG	DRAWN	ENGINEER	CHECKED	SALES ORDER
2/26/24	120-TO	PPS	JR	JR	-
SHEET NAME				REVISION - REV DATE -	SHEET
23-850519-NSBB-1020_WQ1					1 OF 1

REFERENCE DRAWING

BURNS McDONNELL
9400 WARD PARKWAY
KANSAS CITY, MO 64114
816-333-9400
Burns & McDonnell Engineering Co, Inc.
LICENSE NO. E-65

date	detailed
FEB 15, 2022	D. HOWARD
designed	checked
S. LAHODNY	M. GIBLER

Unified Government of Wyandotte County
Kansas City, KS

CSO 19 SEWER SEPARATION (PHASE 1)

REFERENCE DRAWING 15

project	contract
139311	32304

drawing **REF015** – rev. **0**

sheet 73 of sheets

file 139311-REFERENCE DRAWING.dwg

23-850519-NSBB-1020_WQ1.dwg, 2024-02-29 9:27 AM Rackauskas, JR 58.6671

Z:\Clients\WTR\Wycokck\139311_CSO19\Design\Cadd\Civil\Prod_Dwgs\139311-REFERENCE DRAWING.dwg